PHILIP MORRIS
EUROPE MIDDLE EAST AFRICA
RESEARCH AND DEVELOPMENT

Monthly Progress Reports

Strictly Confidential

OCTOBER 1980

Distribution:

A	Messrs. H. Maxwell (2)	A	H. Gaisch
	R.W. Murray		J. Guyot
	J. Gibson		M. Häusermann
	G. Karandjoulis		C. Jeanneret
	P. Stolt		F. Lopes
	H. Böckle		J. Mandiratta
	J.B. Boder		U. Nyffeler
	W. Fink		D. Schulthess
	H. Friedrich		J.M. Villard
B	H. Brugger	B	H. Fauville
	D.R. Gatland		P. Francis
	J.W. Osborne		A. Read
	H. Schildwächter		W. Tessendorf
	E. Stoop		G. Voelkl
	D. Zelkowitz		E. Grossen
C	W.G. Lloyd	C	T.S. Osdene
	F.E. Resnik		W.A. Farone
	H. Wakeham		W.F. Gannon
	R.B. Seligman		L.F. Meyer
D	W. Grünbaum	E	R. Suter

2000143205

Source: https://www.industrydocuments.ucsf.edu/docs/kmml0000

Table of contents

Page		Title	Author
1	1	Product Research	Y. Genoud
2	3	Analytical Investigations	F. Moser
3	6	Agricultural Chemicals	M. Speck
4	9	Biotechnology	D. Schulthess
7	10	Nitrate Reduction	C. Ruf
8	12	Pilot Plant Operations	N. Luthi
9	14	Unit Operations	P. Karbacher
10	15	Reconstituted Tobacco	P. Karbacher
13	17	Cigarette Development	R. Toimil
	21	Cigarette Development	J.H. DuBois
	23	Cigarette Development	P. Nagel
	27	Cigarette Development	Z. Singer
	30	Product Development Laboratory	S. Béguin
14	31	Flavour Development	J.P. Fatton
15	33	Tobacco Analysis	L. Joseph
16	35	Cigarette and Smoke Analysis	F. Senehi
17	37	Additives and Analytical Services	A. Widmer
18	40	New Materials Development	E. Erkohen
	42	Material Testing	P. Balliger
19	44	Specifications	C. Flury
20	48	Physical Testing Methods	T. Piko
21	49	Legislation	W. Fink
22	50	Patents	J. Mandiratta
	51	Instrumentation and Process Automation	M. Thévoz

0001143206

Source: https://www.industrydocuments.ucsf.edu/docs/kmml0000

List of projects covered.

1 Product Research
2 Analytical Investigations
3 Agricultural Chemicals
4 Biotechnology
5 Contract Research
6 Special Events
7 Nitrate Reduction
8 Pilot Plant
9 Unit Operations
10 Reconstituted Tobacco
11 Primary Operations
12 Special Projects
13 Cigarette Development
14 Flavour Development
15 Tobacco Analysis
16 Cigarette and Smoke Analysis
17 Additives and Analytical Services
18 Materials Development
19 Specifications
20 Physical Testing Methods
21 Legislation
22 Patents

Key to distribution:

A Complete Report

B All except Research Report

C All except Contract Research and those reports which might interfere with patent considerations

D 12, 17, 18, 19, 20, 21

E 13, 17, 18, 19, 20.

0001143207

Source: https://www.industrydocuments.ucsf.edu/docs/kmml0000

PROJECT TITLE : PRODUCT RESEARCH

PERIOD COVERED : OCTOBER 1 - OCTOBER 27, 1980

WRITTEN BY : Y. GENOUD

TRIACETIN ANALYSIS BY $(GC)^2$

Work begun last month (1) has been continued.

THE APPLICATION OF FUSED SILICA CAPILLARY (FSC) COLUMNS TO GAS-PHASE ANALYSIS

The analysis time of gas-phase cigarette smoke analysis with a standard glass capillary is ca. 1 hour. By using an FSC column (50 m /0.2 mm treated with the stationary phase SP 2100) in combination with a Model 5880 HP-GC equipped with a cryogenic system, the analysis time was drastically reduced to ca. 28 min (Fig. 1). In addition several peaks of unknown smoke constituents, not found when glass capillaries are applied, were detected. This indicates that several compounds are systematically (partially or completely) absorbed in glass columns.

By shortening the analysis time, we are approaching $(GC)^2$ routine gas-phase analysis.

Y. Genoud

REFERENCE

(1) Y. Genoud, PME Research Laboratory, Monthly Progress Report, September 1980.

0001432 08

Source: https://www.industrydocuments.ucsf.edu/docs/kmml0000

000143209

Figure 1

as-Phase of Cigarette Smoke

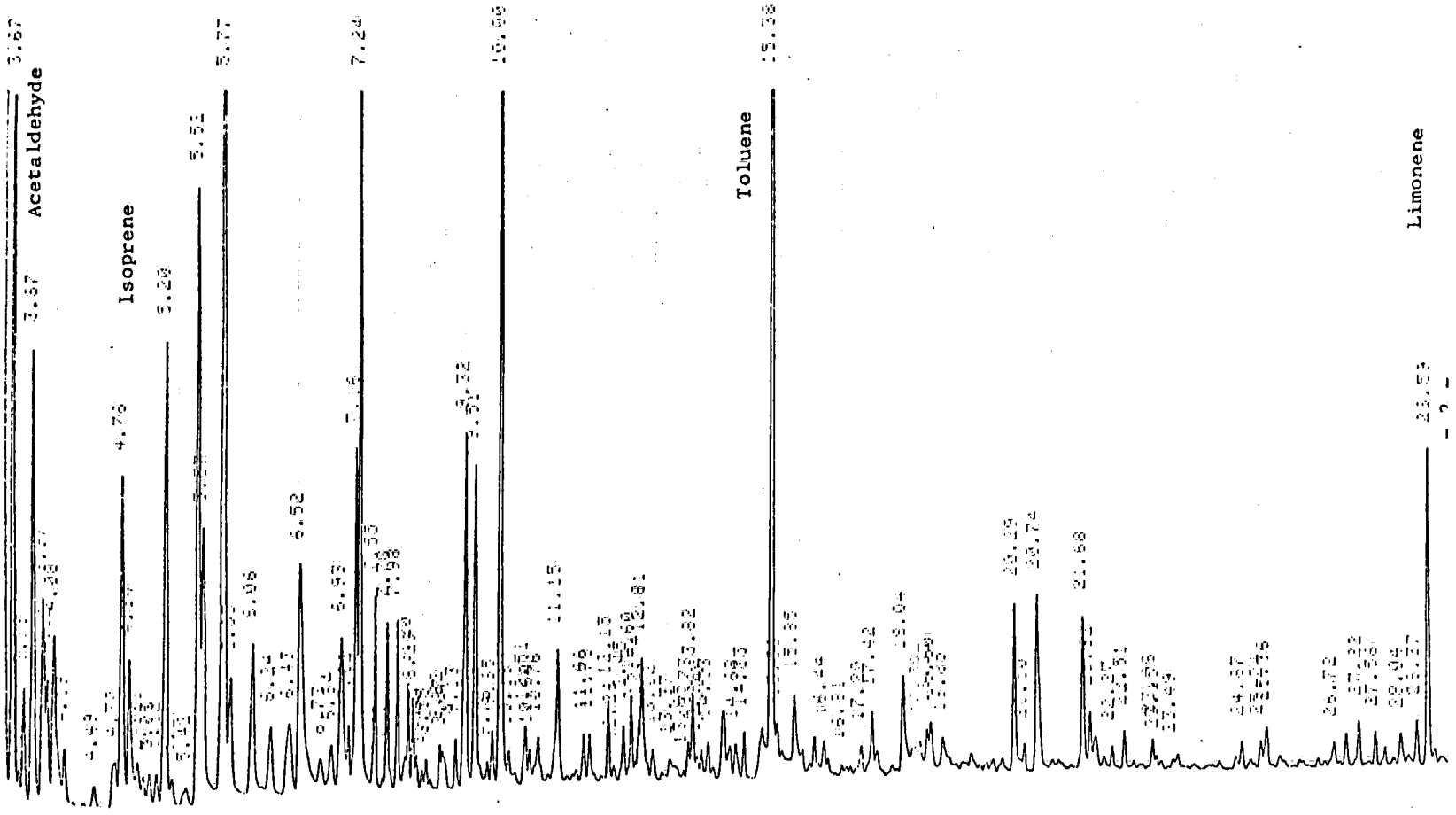

Source: https://www.industrydocuments.ucsf.edu/docs/kmml0000

PROJECT TITLE : ANALYTICAL INVESTIGATIONS

PERIOD COVERED : OCTOBER 1980

WRITTEN BY : F. MOSER

N-NITROSAMINES

SPOTLESS Cigarettes (1)

The analysis of DMN and NPY in the sidestream smoke of the 16 experimental cigarettes of the SPOTLESS series has been completed. The results, summarized in Table 1, will be discussed once the DMN and NPY mainstream smoke values are available (November Progress Report).

Tobacco Specific Nitrosamines

Upon the request of PM-Richmond (2), NNN, NNK and NAtB were determined in two experimental samples and in the mainstream smoke of 2R1 cigarettes (3).

DMN / NPY Reduction in Mainstream Smoke by CA Filter Dilution

In continuation of our studies (4) the influence of dilution on the DMN and NPY concentration in mainstream (MS) and in sidestream (SS) smoke was investigated. Results are given in Table 2.

Table 2

Dilution % [b]	Mainstream Smoke DMN [a]	Mainstream Smoke NPY [a]	Sidestream Smoke DMN [a]	Sidestream Smoke NPY [a]
0	4.0	7.7	196	51
10	3.7	5.3	221	63
15	2.7	4.7	229	67
20	2.6	4.7	252	73

a) All values in ng/cig.

b) Experimental cigarettes ; MLF (with CA filter) of Project No. 170 - 03 (R. Toimil).

0001432210

Source: https://www.industrydocuments.ucsf.edu/docs/kmml0000

A dilution of 15% reduces the DMN/NPY concentration in MS by 33 - 38%, while the SS concentration is increased by 16% (DMN) resp. 31% (NPY). A higher dilution seems to influence the DMN/NPY concentration in SS only.

The study will be continued.

SERVICE FOR OTHER GROUPS

- Following requests by the Leaf Department, lot 3762 (5) (6) and lot 3738 (7) (8), both damaged by white powders, were investigated and the contaminations determined.
- ISH was determined in 78 TLA samples and in two competitive brands.
- Potassium, calcium and magnesium were analysed in 45 NINO extracts by atomic absorption.
- Nicotine was determined by GC in three NINO samples.
- TOC was determined for Biotechnology in 5 samples.
- ET was determined in 9 competitive brands.
- Freon 11 was analysed in 2 brands.

F. Moser

REFERENCES

1) F. Moser, PME Research Laboratory Monthly Progress Report, July 1980.
2) Memo from R. Ferguson to W. Fink - August 25, 1980.
3) Memo from W. Fink to R. Ferguson - November 7, 1980.
4) F. Moser, PME Research Laboratory Monthly Progress Reports, April / May / June 1980.
5) Memo from H. Böckle to W. Fink - September 1, 1980.
6) Memo from W. Fink to H. Böckle - September 16, 1980.
7) Memo from H. Böckle to W. Fink - October 20, 1980.
8) Memo from W. Fink to H. Böckle - November 4, 1980.

0001143211

Source: https://www.industrydocuments.ucsf.edu/docs/kmml0000

Table 1

OMN and NPY in the Sidestream Smoke of the SPOTLESS - Cigarettes

Cigarette Code	DMN (ng/cig.)	NPY (ng/cig.)	$N\text{-}NO_3$ (%)
ØS - A - TOT	267	58	0.27
ØS - A - TOT / SPO	50	7	0.03
ØS - A - MD	306	91	0.25
ØS - A - MD / SPO	54	8	0.02
ØS - A - CH	297	61	0.30
ØS - A - CH / SPO	47	9	0.02
ØS - A / SPO / SPO	75	8	0
ØS - B - TOT	222	75	0.25
ØS - B - TOT / SPO	72	13	0
ØS - B - FC	191	77	0.03
ØS - B - FC / SPO	122	15	0.007
ØS - B - BU	413	177	0.46
ØS - B - BU / SPO	94	18	0.05
ØS - B - OR	*	*	0.04
ØS - B - OR / SPO	84	16	0
ØS - B / SPO / SPO / SPO	88	12	0

* Cigarettes cannot be smoked

Ø0001432 12

Source: https://www.industrydocuments.ucsf.edu/docs/kmml0000

PROJECT TITLE : AGRICULTURAL CHEMICALS

PERIOD COVERED : OCTOBER 1980

WRITTEN BY : M. SPECK

ROUTINE ANALYSIS

Number of samples analysed for pesticide residues in October :

Organochlorines	46
Organophosphorus	46
Organophosphorus + Methamidophos	10
Dithiocarbamate	29
Maleic Hydrazide	24

MH - 30

The bi-monthly (June / July) check of PM brands produced in Munich, Serrieres, Holland, Austria, London, Weltab and Eindhofen (1) showed MH - 30 residue levels ranging from 26 to 56 ppm.

Marlboro basic blended strips destined for Austria, Italy, Finland, Yugoslavia, Poland and Greece and FOCI destined for Spain and the Canary Islands have been analysed for MH - 30. Residues found are between 40 - 60 ppm. Exceptions are FOCI / Spain with 75 ppm and Marlboro / Finland with 70 ppm MH - 30 (2).

NEW ANALYTICAL METHODS

Maleic Hydrazide

The reaction product of maleic hydrazide with dimethyl-sulfate has been identified as 1 - methyl - 3 - methoxy - 6 - pyridazinone (1) (3). The synthesis of 1 on a 20 µg to 5 g maleic hydrazide basis gives the compound in 40 - 50% yield. The efficiency of extraction of 1 with

00014213

Source: https://www.industrydocuments.ucsf.edu/docs/kmml0000

dichloromethane from aqueous solution was found to be 98%.

By applying N,N - dimethylformamide dimethylacetal (DMF - DMA) as methylation reagent 1 was obtained in 80 - 90% yield. The methylation of maleic hydrazide on tobacco with DMF - DMA is presently being investigated.

Ridomil (Metalaxyl)

In a joint experiment initiated by the CORESTA Pesticide Sub-Group the methods developed at INBIFO, Forchheim and Ciba-Geigy are being compared. Both the methods of Ciba-Geigy and of Forchheim include more steps than the INBIFO method and the quantity of solvents needed is much larger.

The methods of INBIFO and Ciba-Geigy give approximately the same Ridomil values. (Table 1).

Table 1

Method	RIDOMIL (ppm)			
	Sample 1	Mean	Sample 2	Mean
INBIFO	2.18	2.20	3.96	3.99
	2.22		4.02	
Forchheim	1.25	1.23	1.40	1.55
	1.20		1.70	
Ciba-Geigy	2.42	2.27	3.57	3.59
	2.11		3.61	

00143214

Source: https://www.industrydocuments.ucsf.edu/docs/kmml0000

REFERENCES

1) M. Speck, PME Research Laboratory, Monthly Progress Report July 1980.

2) Memo from F. Moser to G.S. Osmalov, October 29, 1980.

3) E. Lecoultre, PME Research Laboratory, Monthly Progress Report September 1980.

M. Speck

0001143215

Source: https://www.industrydocuments.ucsf.edu/docs/kmml0000

PME RESEARCH LABORATORY, NOVEMBER 1980

PROJECT TITLE : BIOTECHNOLOGY

PERIOD COVERED : OCTOBER 1 - 31, 1980

WRITTEN BY : D. SCHULTHESS

Influence of Ammonia on Nitrate Assimilation (1)

Previous reports (2) have shown that burly strip extracts may contain higher ammonia - nitrogen levels than we normally dealt with in the NINO process.

In order to determine the influence of ammonia on the nitrate assimilation, a series of trials were made. In a first set of experiments the batch system was checked, using a well defined medium with the following composition : 0.145% yeast extract without amino acid and ammonium sulfate (DIFCO), 4% glucose, potassium nitrate and ammonium sulfate to make up a total of 1080 ppm nitrogen, pH 5.5.

It could be confirmed, that in a medium containing the same amounts of nitrate - N and ammonia - N no nitrate is assimilated, as long as there is some ammonia left. However, the total nitrogen is eliminated at the same time, as if only nitrate - nitrogen was present.

Trials will continue using different nitrate - nitrogen to ammonia-nitrogen levels, using tobacco extracts and continuous cultivations.

Miscellaneous

- Assistance was given for current pilot plant trials.
- On external request the microbial efficiency of a water filter was tested.

REFERENCES

(1) M.F. Mangilli, Notebook 800801, 11 - 12

(2) N. Lüthi, Strips extraction situation report 29.4.1980

D. Schulthess

00014321 6

Source: https://www.industrydocuments.ucsf.edu/docs/kmml0000

PROJECT TITLE : Nitrate Reduction by Controlled Fermentation

PERIOD COVERED : September 26th - October 31st, 1980

WRITTEN BY : C. Ruf

---

1. TRIALS

1.1. Trial NINO 63

During the second part of this trial the fermenter was running at 33°C instead of 35°C (Ref. 1). At this lower temperature the process worked much better and therefore 33°C, or at least 32°C could be considered as a new basic working condition.
During the covered period the fermentation was affected for a few hours by two perturbations :

1) A failure of the pH probe on September 30th was not immediately detected. Therefore no more acid was added for several hours and consequently no more phosphates, because these are added as phosphoric acid mixed with the lactic acid by means of the pH regulation. Due to the want of phosphates the fermentation began to be less efficient and the extract was not fully denitrated. After addition of potassium phosphates by means of the additive line, the process recovered very quickly.

2) Since October 10th some electrical problems caused the addition of too much anti-foam agent into the fermenter. The high concentration of such suspended solids led to the clogging of the exhaust pipes which were cleaned and sterilized again.

1.2. Trial NINO 64

This trial has been running since October 27th and its objective is to check the ability of the fermentation to absorb large and sudden variations of NO_3-N concentration in the feed extract. First conclusions will be available for the next monthly report.

2. EVALUATION OF DENITRATION PROCESSES

2.1. Most of the analytical results from the NINO-RL trial in Richmond (Ref. 2) have been received (Ref. 3).

2.2. Mike Maher and John Machett from Process Engineering in Richmond were in Switzerland during the second week of October. The objective of their visit was to revise the engineering studies for RL denitration prepared by Process Engineering Company, PEC. After a short visit to the FTR factory in Neuchâtel they

00014321?

Source: https://www.industrydocuments.ucsf.edu/docs/kmml0000

were accompanied to PEC in Stäfa by Messrs C. Ruf and D. Schulthess.
Both aerobic and anaerobic processes were discussed (Ref. 4).

3. PILOT PLANT

See monthly report of October 1980 : "Pilot Plant Operations" by N. Lüthi.

4. STRIPS DENITRATION

4.1. A comparative trial will take place during the second week of November (Ref. 5). Two hundred pounds of Burley strips received from PM USA will be extracted and then recombined with fermented liquor. The procedure and a tentative schedule have been established (Ref. 6 and Ref. 7).

4.2. A brain storming session on the strips denitration concept on October 22nd led to a first draft proposal (Ref. 8).
This document was discussed again in an extended meeting on October 27th.

5. REFERENCES

Ref. 1 : Monthly report : "Nitrate Reduction by Controlled Fermentation", September 1980, C. Ruf.

Ref. 2 : Monthly report : "Nitrate Reduction by Controlled Fermentation", August 1980, C. Ruf.

Ref. 3 : Attachments to the minutes of denitration meeting, September 26th, 1980, S. Muller.

Ref. 4 : Notebook No. 5, p. 39-42, C. Ruf.

Ref. 5 : Telex from W. Gannon to M. Häusermann, October 22, 1980.

Ref. 6 : "Procès-verbal de la séance du 22.10.1980", October 24, 1980, C. Ruf.

Ref. 7 : Telex from H. Friedrich to W. Gannon, October 23, 1980.

Ref. 8 : "Strips denitration : draft proposal", October 23, 1980, H. Friedrich.

C. Ruf

CLR/sde
November 17th, 1980

0001143218

Source: https://www.industrydocuments.ucsf.edu/docs/kmml0000

PROJECT TITLE : Pilot Plant Operations

PERIOD COVERED : September 27th - October 31st, 1980

WRITTEN BY : N. Lüthi

---

1. EQUIPMENT

1.1. Liquor clean-up

We experienced some clogging problems with the rented disk centrifuge. The piping was modified in order to pass through the existing basket filter before entering the centrifuge for the final clean-up.

1.2. Dryer

Some problems were observed with the burners of one of the two brackets. The flames died out frequently.
After having changed the regulating device no more burner failures were noticed.

1.3. V-Shape-Extractor

The cardan of the extractor broke down on October 28th.
With the assistance of the FTR workshop it was repaired and the fermenter was cooled down for about 5 hours.

1.4. Sterilization and pasteurization line of the extract

Again some clogging problems were observed in the sterilization as well as in the pasteurization line of the extract.
After having modified the piping for the extract flow of the clean-up system no other cloggings occured.

1.5. Fermenter

The automatic antifoam injection system continues to show bad performance from time to time. It has to be supervised.

1.6. Centrifuge for NINOMASS separation

The repaired motor of the centrifuge arrived on October 2nd.
Since then the centrifuge is working well. However it is periodically checked by the FTR electrician.

00014321 9

Source: https://www.industrydocuments.ucsf.edu/docs/kmml0000

1.7. Rotocell extractor

The purchased extractor arrived on October 29th and was installed.

PROCESS DEVELOPMENT

N. Lüthi

NIL/sde
November 17th, 1980

0001143220

Source: https://www.industrydocuments.ucsf.edu/docs/kmml0000

PROJECT TITLE : UNIT OPERATIONS I

PERIOD CEVERED : September 26th - October 30th, 1980

WRITTEN BY : P. Karbacher

NINOMASS

The test to use NINOMASS in chicken fodder started on October 3rd 1980. First results will be available mid December.

RL- HANDSHEET MAKING UNIT

The sheet mould 12" x 12" ordered in the USA was delivered in Richmond. It was shipped to Neuchâtel on October 24th, 1980. The freeness tester will be sent to Neuchâtel next week.

PROCESS DEVELOPMENT

P. Karbacher

KPA/sde
November 17th, 1980

00014322

Source: https://www.industrydocuments.ucsf.edu/docs/kmml0000

PROJECT TITLE : RECONSTITUTED TOBACCO

PERIOD COVERED : September 27th - October 30th, 1980

WRITTEN BY : P. Karbacher

MONIQUE/RCB

Production

During this month 46'800 kg of sheet were produced, a production record.

Roll coater, rubber roll

An engineer from Huber + Suhner AG visited Onnens on October 27th. This firm is specializing in rubber rolls for various industries. The problems were discussed and a sample of slurry was given to them.
We will receive an offer for the replacement of the rubber of one roll.

Steel belt

We observed again a deformation of the steel belt. A convexity of some millimeters was measured at the middle of the belt. Sandvik, the belt supplier, was contacted. The last flattening operation was carried out in January 1980.

LUWA ventilation system (Ref. 1)

An increase of the ammonia concentration in the ambient air was observed during the last month.
This increase was due to deposits on the air filter bags. These bags were cleaned but the concentration was still higher than in summer, as the windows are now closed during the colder season. We do not exceed the legal limit of 25 ppm but even at lower concentrations the working conditions are not very pleasant.
This problem is followed up by Mr. Regard, an engineer at FTR.

Monique/RCB trials (Ref. 2)

Panel A accepted the 100% sheet cigarettes made with a totally different feedstock composition.
It was decided to try these sheets at the 5.1% level in two 3'000 kg Marlboro test blends.
These cigarettes will be evaluated by Panels A and B. A mail out test is also planned.

0001143222

Source: https://www.industrydocuments.ucsf.edu/docs/kmml0000

REFERENCES

Ref. 1 : M. Regard to W. Peter, Ventilation Monique, October 21st, 1980

Ref. 2 : Test de dégustation, Panel A, October 21st, 1980.

PROCESS DEVELOPMENT

P. Karbacher

KPA/sde
November 17th, 1980

0001432223

Source: https://www.industrydocuments.ucsf.edu/docs/kmml0000

PROJECT TITLE : CIGARETTE DEVELOPMENT TECHNICAL REPORT

WRITTEN BY : R. TOIMIL

PERIOD COVERED : October 1st - 24th 1980

A R E A I I I

I T A L Y

307 QUEEN

Format : 7.35 / 25 / 97.5 mm
TAR : 12 mg
SN : 0.6 mg

The analyses of the MED 080 blend (IT 0230701NNL) showed a significant difference in total alcaloids (TA) (1.65 % instead of 1.21 % for prototype W6). Therefore three new blend formulae have been established in order to reach the objectives.

Blend 1 (MED 080 modified)

MAA 004 with 7.3 % of stems instead of 7.3 % of Esther

Blend 2 (MAA standard)

MAA 004 with 7.3 % of Esther

Blend 3 (Sample 39)

MAA 004 without Esther

These three blends gave the following analytical results :

	TA (%)	SN (mg/cig.)	TAR (mg/cig.)	Weight at 12 % MC (mg/cig.)
Blend 1	1.39	0.83	11.80	801
Blend 2	1.27	0.61	10.00	763
Blend 3	1.45	0.83	11.78	795

00014322

Source: https://www.industrydocuments.ucsf.edu/docs/kmml0000

Prototypes made with blend 2 (MAA standard) achieve the analytical objectives of the project according to the prototype W6.
W. Tschudin will transmit to PM Holland the necessary instructions to start the first production.

380 GAMMA 100'S

The analytical results of the first two prototypes correspond to those of the GAMMA prototypes.

Prototype No	1 P	2 P
TAR mg/cig.	4.5	6.8
SN mg/cig.	0.4	0.6
CO mg/cig.	5.9	7.9
NO mg/cig.	0.11	0.15
Puff count	11.4	11.2

The results of the taste evaluation will be available within two weeks.

257 LOS ANGELES

The prototypes made with the Pela 200, Pela 170 and Pela 150 cigarette papers have been analysed.
The difference in tar of 0.6 mg between the Pela 200 and the Pela 170 is not significant.
Taste evaluation will be effected during week 44.

P A N E U R O P E

350 PETER PAN Diluted L & M

A prototype (12P) has been produced with a 4 M. 0.11 . 6.5 tipping paper from Malaucène. Analytical results correspond to those of prototype 8 (ref. report of R. Hirsbrunner dated March 21st 1980).

2000143225

Source: https://www.industrydocuments.ucsf.edu/docs/kmml0000

Prototype	8	12 P
TAR mg/cig.	14.4	14.7
SN mg/cig.	1.21	1.22
CO mg/cig.	13.6	13.8
NO mg/cig.	0.26	0.27
Puff count	9.5	9.4
Tipping	Z3/60	4 m. 0.11 . 6.5

Prototype 12P will be taste evaluated.

389 KAMIKAZE

Different prototypes have been produced with Barclay filters, PMS and FLL cigarette rods.
The dilution of the Barclay system has been evaluated with a kind of spirometer specially made by T. Piko (see monthly report of T. Piko : Kamikaze).
A trial with US filters has been carried out on the Manuela machine. Results are negative because of the too low substances of the available papers.
A new gluing applicator has been ordered from the firm Chappuis (enclosure 1) which should give a higher dilution level than the old one (14.5 % on MLF with micro-laser 4 M. 0.3 . 3.5, prototype 2P).

R. Toïmil

October 31st 1980 / RAT / cap

00014322 6

Source: https://www.industrydocuments.ucsf.edu/docs/kmml0000

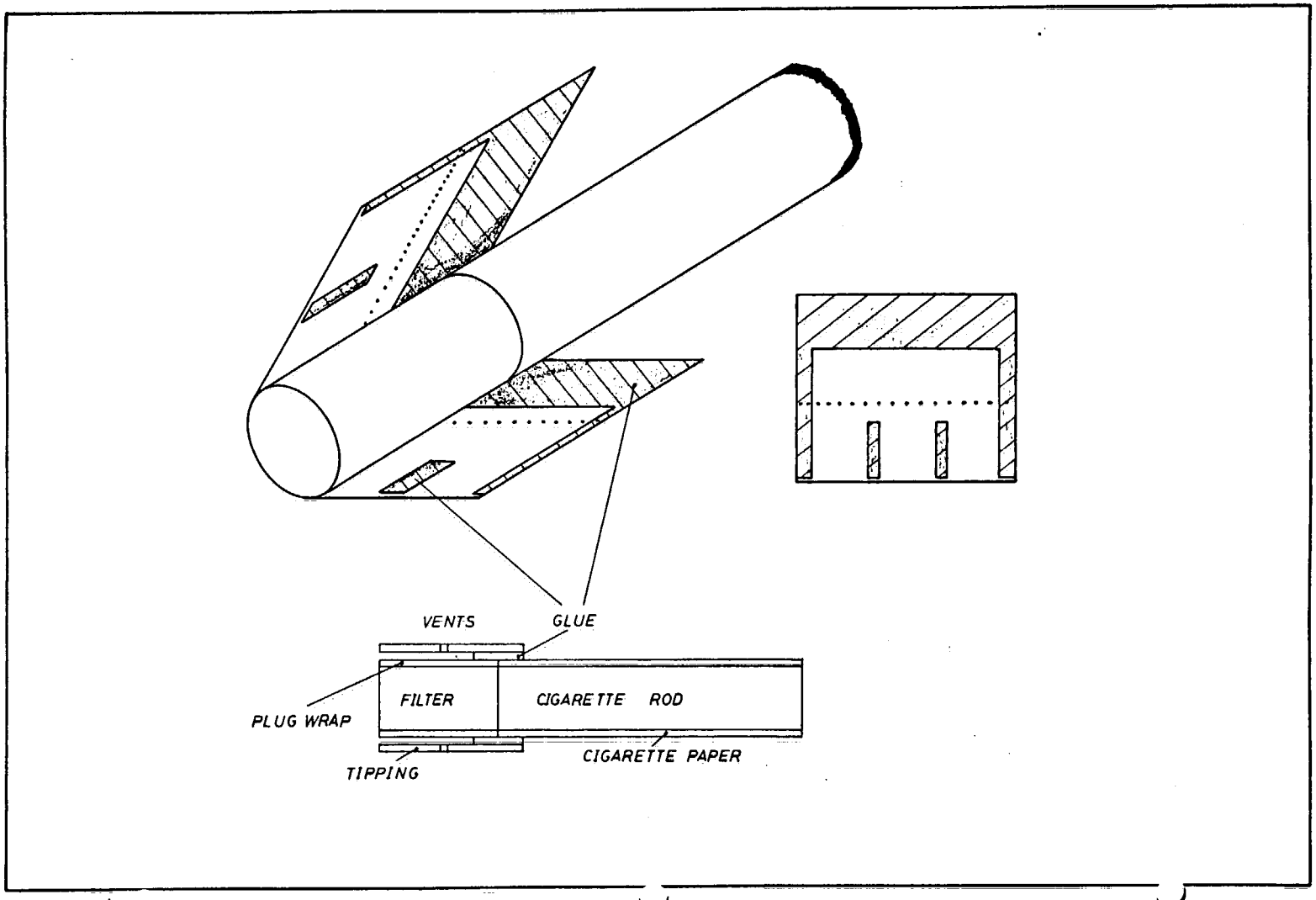

Source: https://www.industrydocuments.ucsf.edu/docs/kmml0000

PROJECT TITLE	:	CIGARETTE DEVELOPMENT TECHNICAL REPORT
WRITTEN BY	:	J.-H. DU BOIS
PERIOD COVERED	:	September 26th - October 24th 1980

S W E D E N

355 GOSTA I

A product delivering 1 mg tar or less. SN and CO values are not specified and should be commensurately low. American blend type of taste. Moderate size format with cork tipping.

A large scale repetition of prototype No 20 confirmed the DPM of 2.2 mg/cig. for this prototype. This means that a more porous tipping paper will have to be used and a prototype with a macro-laser type of perforations will be made. An 80 % dilution level must be guaranteed in order to meet the objective.
Trials were also carried out with a Wattens 100 AF cigarette paper containing acetate and formiate in order to improve the taste of the first puffs. There is a slight improvement but the burning rate is too fast and this would be a negative quality for the Swedish Market.

361 GOSTA II

An American blend, GAMMA type product, delivering 2 or 4 mg tar. Moderate size.

Prototype No 48 is presently being tested against BLEND ULTRA in both open and blind tests.
In the open test, both cigarettes have the BLEND ULTRA die-print on the cigarettes.
In the blind test, one series has a 10 mm overtipping and the other series has a 15 mm overtipping.
This set up has been chosen in order to test our prototype against the competitive brand as well as a possible influence of overtipping on low delivery cigarettes.

0001432228

Source: https://www.industrydocuments.ucsf.edu/docs/kmml0000

359 GULLIVER — Product test between MLF and MLK.

At the last NPC meeting held in Munich, it has been decided to test the Swedish MARLBORO against the Swiss MARLBORO KING SIZE in an open test (no die-print, no overtipping).
These products have been sent to Sweden for testing.

F I N L A N D

390 BELMONT MULTIFILTER — Numbers reduction of the present BEM to below 12 mg/cig. DPM, 0.8 mg/cig. SN and 10 mg/cig. CO.

Prototype 101080 produced in ATO is fully within the objectives according to the State Laboratory (VTT) analytical results.
This was achieved by using porous dual acetate filters and mechanically perforated tipping (3 lines 0.2 x 0.3 mm), 27 mm wide.

J.-H. Du Bois

10/29/1980/JHD/cap

0001143229

Source: https://www.industrydocuments.ucsf.edu/docs/kmml0000

PROJECT TITLE : CIGARETTE DEVELOPMENT
TECHNICAL REPORT

WRITTEN BY : P. NAGEL

PERIOD COVERED : September 27th - October 28th 1980

S W I T Z E R L A N D

364 CALIFORNIA MPH — Use the CALIFORNIA blend for MPH cigarettes

Reference is made to the monthly report of September 1980. Trials have been carried out with different cigarette papers on the MPH cigarettes. Four prototypes giving similar analytical figures have been submitted for taste evaluation. Among them prototype 12P is found to be very close to the current MPH cigarettes and will be presented to Swiss Marketing shortly.

	Prototype 12	MPH cigarette
Format	7.85/25/99	7.85/25/99
Blend	CH0336401N02	MAA 42
Cigarette specifications		
Cigarette paper	Pela S 130 Mn	Pela 22/45 M
Filtre	MPH PC 100 ----------	
Tipping paper	Micro-laser 4 x M. 0.15 . 4.5 ----------	
Total weight	1219	1289
Tobacco weight at 12 %	865	944
Total (Filter) RTD	102 (75)	105 (69)
Filler		
TA	1.43	1.36
Nitrate Nitrogen	0.16	0.16
Reducing sugars	8.6	11.4
Smoke		
TAR	10.6	13.5
SN	0.99	1.02
CO	10.8	13.8
NO	0.16	0.20
Puff count	10.9	11.6

0001143230

Source: https://www.industrydocuments.ucsf.edu/docs/kmml0000

Comments : It should be noted that TAR and CO deliveries have been reduced of about 20 % without influencing taste impact and smoker's satisfaction.

Quote : "The saving of 8 % of tobacco weight due to the introduction of ET is not negligible and could be increased to 10 % without changing the quality set of the cigarette."

278 EVEREST

Reference is made to the monthly report of September 1980. The issue of the trials carried out on FLI and FLK cigarettes with the modified blend did not show any improvement with regard to the TAR level.

New objectives : TAR = 6 mg
SN = 0.6 mg

In order to achieve these objectives some prototypes based on FLI cigarette specifications have been produced with the FLL blend. In parallel another higher porosity cigarette paper BDP 15 EP 75 from Brauenstein has been tested.

363 DELAWARE

Product test
Launching phase
TAR = 3 mg
SN = 0.3 mg
Puff count = 6.5 - 7
Format : 7.95 / 25 / 79.4 mm

Product test

A product test with two prototypes (28P and 29P) against SELECT NO 2 is presently in the field. (For more details refer to the monthly report of September 1980).
Results are expected for November 7th 1980.

Launching phase

The issue of the meeting for launching held in FTR on the 10th of October 1980 was the establishment of provisional specifications for the new PM brand.
The first production is foreseen for mid-November and the sale distribution for the beginning of December 1980.

2000143231

Source: https://www.industrydocuments.ucsf.edu/docs/kmml0000

284 MARYLAND

TAR = 12 mg
Puff count = 8
Format : 7.95 / 18 / 79.4 mm

1. The conclusions of the product test made in June 1980 can be summarized in the following : "Prototype 122 cannot be recommended as a replacement of the current BRUNETTE DOUBLE FILTRE product."

2. After these negative results, further development seemed to be necessary.
Different cigarette paper manufacturers have been contacted to supply us with cigarette papers of different porosities, specially developed for the MARYLAND type cigarettes. Trials have been carried out with two cigarette papers from Mauduit and nine from Brauenstein with the aim to choose among them the right one.
Analytical figures were not taken in consideration.
All prototypes have been taste evaluated by expert Panel. Only one sample (134 P) with 14-5030 EP 75 cigarette paper from Brauenstein has been retained for further development.

3. In view of the Maryland tobacco situation, the blend composition of this project had to be completely revised and a new leaf formula will be established.
Based on the same, different prototypes will be prepared as follows :

a) With the actual BRD specifications
b) With prototype 122 and the same but with modified filter
c) With prototype 134 and the same but with modified filter
d) With prototype 134 without Esther in the blend

00014323 2

Source: https://www.industrydocuments.ucsf.edu/docs/kmml0000

N I G E R I A

395 BRADFORD

DPM reduction of 2 - 3 mg
Concerned brands : GREEN SPOT
LINK FILTER
TARGET FILTER
TARGET SUPER

Based on the given specifications and the C.I.R. 6-7 1980 analytical figures, some modifications are suggested in order to achieve the objectives.

GREEN SPOT — To use a higher porosity cigarette paper (WP 70)

LINK FILTER
a) To use a higher porosity cigarette paper (WP 70)
b) To use a higher efficient filter (2.5 Y / 48'000)

TARGET FILTER
a) To increase the filter length (from 18 to 20mm)
b) To use a higher porosity cigarette paper (WP 70)
c) To use a higher efficient filter (2.5 Y / 48'000)

TARGET SUPER
a) To use a higher porosity cigarette paper (110-6 EP)
b) To use a higher efficient filter (2.5 Y / 48'000)

These propositions will be discussed during the next Committee B meeting.

P. Nagel

P. Nagel

10/29/1980/PHN/cap

00014323

Source: https://www.industrydocuments.ucsf.edu/docs/kmml0000

PROJECT TITLE	:	CIGARETTE DEVELOPMENT TECHNICAL REPORT
WRITTEN BY	:	Z. SINGER
PERIOD COVERED	:	September 27th - October 24th 1980

G E R M A N Y

365 BARBARA

K = 13 mg
N = 0.9 mg
Puff count = 9
Format : 7.95 / 20 / 84.4 mm

Reference is made to the monthly report of August-September 1980.
Version 9P has been sent to Panel B in Munich for taste evaluation. The results of which are summarized in the following :
"9P gives more taste impact in comparison with 7P. The special "kick" of an American blend cigarette is more pronounced. Very close to Camel."
It is expected that Marketing will, in short term, supply us with the outcome of their decision concerning the acceptability of prototype 9P.
For further development the use of CF should not be excluded.

250 COCKPIT BLUE

A 100 mm version has been developed with identical raw materials as used on the 90 mm version.

Total length	mm	90	100
K	mg/cig.	14.1	15.4
N	mg/cig.	1.09	1.23
CO	mg/cig.	14.3	14.5
NO	mg/cig.	0.19	0.23
Puff count		10.2	11.6

Taste evaluation will be requested.

00001432234

Source: https://www.industrydocuments.ucsf.edu/docs/kmml0000

377 JACQUELINE

K = 18 mg
N = 1.5 mg
Format : 7.95 / 25 / 90 mm

In order to achieve the new objectives a more diluted version of prototype 2P has been produced. At the same time trials with different cigarette paper are being made on this prototype with the aim to improve the taste quality.

335 LOLITA

K = 10 mg
N = 0.8 mg
Format : 7.95 / 25 / 84.4 mm

The new AC solutions from Richmond are available. The development continues according to the program as described in the monthly report of July-August 1980.

317 "M"

Product test
Decreasing of the TAR delivery to 10 mg

A filter with a higher porosity plug wrap has been used for the new product test prototype. The 10 mg objective level has been achieved. According to Panel A evaluation the test can be released.

336 MARY

Product test

A Maryland type cigarette will be consumer tested against MARLBORO.
In order to have the same aspect on both product test cigarettes, a MARLBORO has been produced with Pela 200 Velin cigarette paper from Schöller & Hösch.
Panel A did not find any similarities between the current and the tested MARLBORO.
The quality of the used cigarette paper is doubtful.
Therefore the use of Velin 1615 from Brauenstein has been requested.

340 GAMMA

Product test

The blind product test with PMS cigarettes against LORD EXTRA and R6 is presently in the field.
Results are expected for mid-November.

2000143235

Source: https://www.industrydocuments.ucsf.edu/docs/kmml0000

233 COUNTRY DB

Reference is made to the monthly report of August-September 1980.
The development continues according to the established program.
The problem of the visibility of electro-perforated tipping paper zone seems not to be solved.
The next trials will be carried out with :

- Malaucène micro-laser perforated tipping paper 3xM. 0.11 . 6.5
- Enterlein Z3/70 electro-perforated tipping paper
- Enterlein tipping paper electro-perforated by Tann
- TH6/0175 Z3/70 electro-perforated tipping paper from Benkert
- Enterlein tipping paper micro-laser perforated by Malaucène

Z. Singer

Z. Singer

10/24/1980/ZDS/cap

0001143236

Source: https://www.industrydocuments.ucsf.edu/docs/kmml0000

PME PRODUCT DEVELOPMENT, October 1980

PROJECT TITLE : PRODUCT DEVELOPMENT LABORATORY
PERIOD COVERED : September 25th - October 22nd 1980
WRITTEN BY : S. BEGUIN

---

1) CIGARETTE PRODUCED IN THE MANUFACTURING DEPARTMENT

a) Total quantity : 1,311,000
b) Number of prototypes : 126

2) TOBACCO BLEND TRIALS IN THE PRIMARY DEPARTMENT

a) 9 x 1,000 kg (unflavoured)

3) FILTER RODS PRODUCED IN THE FILTER MAKING DEPARTMENT

a) Total quantity : 116,000
b) Number of prototypes : 10

4) PACKS (20 cig.) PRODUCED IN THE PACKING DEPARTMENT

a) Total quantity : 33,800
b) Number of projects : 25

5) PRODUCT TESTS PREPARED : 3

S. Béguin

SEB / cap

0001143237

Source: https://www.industrydocuments.ucsf.edu/docs/kmml0000

PROJECT TITLE : Flavour Development

WRITTEN BY : J.P. Fatton

PERIOD COVERED : September 25th - October 25th, 1980

1. Projects

1.1 Switzerland and Germany

Harvard - Colorado

The new flavors developed in PM Richmond were received. Two batches of 20 kg of tobacco were sprayed as a first trial.

Lolita

The new after-cut flavors were received from PM Richmond and some batches of tobacco prepared.

1.2 Pan European Projects

Peter Pan

The flavors used for project Lolita were also used for Lark Pan Europe.

1.3 United Kingdom

Keegan

First batches of cut filler were prepared with the new top flavors received from Richmond.

1.4 USSR

Cosmos

During Mr. R.P. Heretick's visit at Neuchâtel, the modificatior of recipes was decided. Tests will be done with less confidential ingredients.

2000143238

Source: https://www.industrydocuments.ucsf.edu/docs/kmml0000

2. Contacts with suppliers

H. Ambrosius sent us several samples of valerian roots and powder for project Cosmos.

Samples of different tobacco flavors were received from Naarden International, International Flavors and Fragrances and Haarmann und Reimer.

J.P. Fatton

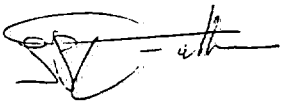

October 31st, 1980
JPF/noh

0001143239

Source: https://www.industrydocuments.ucsf.edu/docs/kmml0000

PROJECT TITLE : Tobacco Analysis

WRITTEN BY : L. Joseph

PERIOD COVERED : August 28th - October 29th, 1980

Tobacco lot analyses

1. Special trials

MD tobaccos, storage influence (Ref. 1)

We have not yet begun the analyses.

Special RL for UK

A sample of the special RL production for UK has been submitted to TLA. Analyses are under way.

2. Routine tobacco lot analyses

Introduction of inputs on EDP

Partial analytical results of 58 lots were introduced in the analytical data list during this period.

Lots under evaluation

Twenty five lots.

Lots available, but not yet analysed

Three lots.

3. Assistance to other projects

Reference cigarettes for projects California, Barbara, Montana, Lolita, Jacqueline, Keegan and Gulliver have been made.

0001432 40

Source: https://www.industrydocuments.ucsf.edu/docs/kmml0000

RCB-CH (Ref. 2)

Special trials for RCB changing the feedstock: with dry flavor (lot 0135) and without dry flavor (lot 0134) were run. Two samples of these trials 14 and 15 (lots No. 0134 and 0135) have been received. Both give a higher DPM and SN delivery and a lower N-NO_3 level and NO delivery. The other parameters do not show important changes.

Nino RCB (Ref. 3)

Trial No. 9 with biomass shows higher DPM, CO and HCN delivery than the trial without biomass.

ETON

TLA cigarettes were made with 100% ETNA before and after expansion in Onnens. The filling power was doubled due to expansion. Besides, TLA cigarettes were made with California blends (with ETNA-US and ETNA-CH) and MLZ (with ETNA-US and ETNA-CH).

The analyses are under evaluation.

4. Miscellaneous

Smoke yields prediction

A first draft has been made to allow the prediction of TPM deliveries from the results of each TLA lot composing a blend. This draft, based on RTD and TPM values per puff was established on untreated Spotless blends.

L. Joseph

References:

1. Mr. Karle's report: "Chemical, physical and organoleptic examination of MD tobaccos ..., of May 12, 1978", dated September 19th, 1978.

2. Mr. Karbacher's monthly report: "Reconstituted Tobacco" of September 1980.
Mr. Karbacher's letter to Mr. Caccivio, dated September 10th, 1980.

3. Letter from Ms. Joseph to Mr. Moser, dated November 3rd, 1980

00014324

Source: https://www.industrydocuments.ucsf.edu/docs/kmml0000

PROJECT TITLE : Cigarette and Smoke Analysis

Period Covered : October 1 - 30, 1980
Report Written by : F. Senehi
Report Approved by : F. Lopes

SALES WEIGHTED AVERAGE

Assistance was given to Messrs. A. Glangetas and T. Trinh, Product Coordinators PME, who calculated the sales weighted average tar and smoke nicotine deliveries for 1979.

Country	All cigarettes considered		PM brands	
	Tar	SN	Tar	SN
Denmark	23,2 (83,9)	2,13	14,6 (0,7)	1,06
Finland	17,0 (97,2)	1,10	16,6 (42,0)	0,90
France	19,3 (94,0)	1,27	16,7 (4,8)	1,09
West Germany *	13,5 (98,4)	0,78	12,9 (11,4)	0,79
Italy	18,0 (76,3)	1,21	17,4 (28,6)	1,14
Sweden	15,1 (91,1)	1,29	16,2 (9,4)	1,22
Switzerland	12,6 (96,4)	0,89	13,7 (31,2)	0,99
United Kingdom	16,6 (83,6)	1,39	16,0 (1,5)	1,30

* For West Germany, we already mentioned the sales weighted average in the July report, 1980.

( ) % market

The sales weighted average is the average of Tar, SN, etc. deliveries for a given market taking into account the sales of the different brands.

The Tar and SN values used for the calculation correspond to the printed figures on pack, except for Italy (values taken from C.I.R.) and for the United Kingdom (Government listed values).

CIGARETTE INFORMATION REPORT (C.I.R.)

- A document has been worked out in order to define precisely the present procedure used for setting up the C.I.R. (Ref. 1).

0001432 42

Source: https://www.industrydocuments.ucsf.edu/docs/kmml0000

PROJECT TITLE : Cigarette and Smoke Analysis

- The following programs, allowing to obtain at a certain sequence the analytical results of the C.I.R., memorized in the computer, will be slightly modified in order to meet the requirements of the PME staff.

1. Comparison of "Monthly average" with "number printed on pack"

2. History of the brands

3. Brands ranked according to Tar, SN, etc. deliveries

Other new programs are being studied.

PRODUCT REPORTS

Product reports were written on the following new or modified brands:

Brand	Manufacturer	Country of Sale
Kool International Mild Menthol 95 F (new brand)	BAT	West Germany
Liberty 84/F (new brand)	Reemtsma	West Germany
Disque d'Or 80/F (new brand)	Rinsoz&Ormond	Switzerland
Disque d'Or Extra 80/F (new pack)	Rinsoz&Ormond	Switzerland
Stella 100 extra long 100/F (new brand)	Laurens	Switzerland
London 84/F (new brand)	London Tob. Co.	United Kingdom

QC FINISHED PRODUCTS

F. Senehi

References:

1. Letter from F. Senehi to M. Pittet, Nov.6, 80

07.11.80 SEF/edk

0000143243

Source: https://www.industrydocuments.ucsf.edu/docs/kmml0000

PROJECT TITLE : Additives and Analytical Services

Period Covered : September 24 - October 27, 1980
Report Written by : A. Widmer
Report Approved by : F. Lopes

TRIALS WITH NEW SUPPLIERS OF TOBACCO ADDITIVES

- Diammonium phosphate (HETAKO, Evonniaz/yellow sheet 5675, 100 g) - Ref: 1

  Out of specifications

- Diammonium phosphate (HETAKO, Evonniaz/yellow sheet 5795, 250 g) - Ref: 1

  Within specifications. As this product is significantly more expensive than the products of the other four potential suppliers, no further action is planned for the moment.

- Diethylene glycol (BASF, Ludwigshafen/PMG Berlin) - Ref: 2

  The sample is within specifications. We suggested to produce test-cigarettes with this product.

- Invert sugar (DEVOLDER, Bruxelles/ 1 kg) - Ref: 3

  The sample is within specifications. For an industrial trial 20 kg were ordered (27.10.1980).

- Sodium chloride (SOCIETE D'AGRICULTURE ET DE VITICULTURE, Cornaux; ex SCHWEIZERISCHE RHEINSALINEN AG, Schweizerhalle/yellow sheet 5842,1000 kg)

  The specifications for sodium chloride were modified (Ref: 1). The first shipment corresponds entirely to our new specifications.

TRIALS WITH NEW SUPPLIERS OF FILTER ADDITIVES

- Activated charcoal (ZÜLLIG OVERSEAS EXPORT, Zürich; "C.G. 8004008"/ yellow sheet 5853, 37 kg)

  The sample which was foreseen for an industrial trial was refused. Reason: The granulometric analyses showed a value of 1.1 % (specifications: < 0.05 %) of the fraction > 100 mesh.

- Methoxy polyethylene glycol 550 (HODAG CHEMICALS INTERNATIONAL, Sokie (USA) / yellow sheet 5878, 5 kg)

  The sample is out of specifications as regards water-content and molecular weight.

- Methoxy polyethylene glycol 750 (HODAG CHEMICALS INTERNATIONAL, Sokie (USA) / yellow sheet 5878, 5 kg)

  The sample is out of specifications as regards water-content and acidity.

0001143244

Source: https://www.industrydocuments.ucsf.edu/docs/kmml0000

- Polyethylene glycol 600 (HODAG CHEMICALS INTERNATIONAL, Sokie (USA) / yellow sheet 5878, 5 kg)

  Within specifications. 100 kg were ordered for an industrial trial (27.10.80).

- Methoxy polyethylene glycol 650 (PLÜSS STAUFFER AG, Oftringen; ex HOECHST, München / yellow sheet 5868, 5 kg)

  Methoxy polyethylene glycol with an average molecular weight of 650 could replace the mixture of methoxy polyethylene glycol 550 and 750.

  An average molecular weight of 636 was found in the sample. The other parameters (acidity, water, ashes, pH) were within specifications for methoxy polyethylene glycol 550. 100 kg were ordered for an industrial trial (13.10.80).

QUALITY CONTROL OF FILTER ADDITIVES

- Methoxy polyethylene glycol 550 (BP CHEMICALS) - Ref: 4

  The sample, having a slight yellowish coloration, is within specifications as regards chemical parameters.

- Plasticizer "CA-50-FI" - Ref: 5

  During application, the temperature of the solution (50 % Methoxy polyethylene glycol 550 and 50 % Methoxy polyethylene glycol 750) is maintained at 80°C. At the end of the stock the temperature in the citern rises sometimes up to 120°C. A sample heated at 120°C during 24 hours showed an increase of acidity passing the limit of the specifications. On the other hand, the influence of the temperature on the average molecular weight is negligible. Instructions were given to the filter making department in order to supervise closely the temperature.

TRIALS WITH NEW SUPPLIERS OF GLUES

- Filter glue (Hot Melt) (LAESSER AG, Erlinsbach "LESSOTHERM 2088-1" / yellow sheet 5747, 3 kg)

  Machineability: There is a significant difference to the standard. Instead of a speed of 380 m/min with the standard quality, only 340 m/min could be reached.

  Concluded on September 29, 1980

- Filter glue (Hot Melt) (HENKEL CHEMIE GmbH, Pratteln; "TECHNOMELT Q 2266 T"/ yellow sheet 5702, 8 kg)

  Machineability: No significant difference compared with the standard glue.
  Storage: After two months, no difference compared with the standard could be observed.

  The subjective evaluation showed a difference to the standard cigarettes. The sample was rejected.

  Concluded on October 20, 1980

00001432 45

Source: https://www.industrydocuments.ucsf.edu/docs/kmml0000

PROJECT TITLE : Additives and Analytical Services

ASSISTANCE QC FOR OTHER COUNTRIES

- Determination of viscosity (PMH, Eindhoven) - Ref: 6

  The viscosity in function of the temperature (20-90°C) was determined on the rotational BROOKFIELD - viscosimeter for honey and sorbitol.

- Determination of the flash-point (WELTAB, Bruxelles) - Ref: 7

  The flash-points according to PENSKI-MARTENS, the density and the ethanol content were determined for MF-AC, PMF-AC, FAMA-AC and MF-UK Base.

SERVICES FOR OTHER GROUPS

- Analyses for Mr. P. Ghiste

  Chloride in extracts (6 samples)

- Analyses for foil mentholating

  Menthol in cigarettes (4 samples)

- Analyses for ETNA

  Humectants in cut rag and expanded tobacco (14 samples)

- Analyses for Mr. J.P. Fatton

  Density, refraction, water- and ethanol content in rum (1 sample)

QC ANALYTICAL SERVICES

A. Widmer

REFERENCES:

1. Monthly Report A. Widmer, August 1980
2. Letter from A. Widmer to Mr. W. Reinbold (PMG Berlin), dd Sept. 23,80
3. Letter from A. Widmer to Mr. R. Devolder, dd Sept. 23, 1980
   Monthly report A. Widmer, July 1980
4. Letter from A. Widmer to Mr. A. Schembri, dd Sept. 29, 1980
5. Letter from A. Schwarb to Mr. E. Ringgenberg, dd Oct. 16, 1980
6. Letter from I. Keller to Mr. B. van Duuren, dd Sept. 26, 1980
7. Letter from A. Widmer to Mr. H. Fauville, dd Oct. 27, 1980

04.11.80 ALW/edk

0001432 46

Source: https://www.industrydocuments.ucsf.edu/docs/kmml0000

PROJECT TITLE : New Material Development

WRITTEN BY : E. Erkohen

PERIOD COVERED : September 26th - October 29th, 1980

1. Tipping paper

Two bobbins perforated by micro-laser were received from Malaucène. The permeability of air of this tipping paper is 59 l/h/4 cm. The only difference between this quality and the former 3M 0.11.6.5 (Ref. 1), submitted to us by the same supplier, is a two instead of a three-row perforation (Ref. 2). The dilution being the same for both qualities, the two-row perforated paper presents an advantage of price.

MLK-CH were made with this tipping paper and compared to MLK-CH standard cigarettes (Benkert Z3/60). The results on dilution and smoke analyses have not yet been received.

2. Filter paper

2.1 Ecusta Ultra porous plug wrap (Ultrapor^{M})

Six bobbins of Ultra porous plug wrap were received from Ecusta (Ref. 3). Of the qualities received, only No. 28018 with a Coresta porosity of 1700 retained our attention. MLFPB-108 filters were made. They will be tested on MLF-CH.

2.2 Schoeller & Hoesch "FU-POV 100 mgl, FU-POV 150 mgl, and FU-POV 250 mgl"

Schoeller & Hoesch developed a new high porous plug wrap with 20 g/m^2. From an economic point of view there is an advantage of less down-time for changing the bobbins (Ref. 1). The only quality of interest is the FU-POV 150 mgl. FLLPC-100 filters were made. They will be tested on FLL-CH.

E. Erkohen

00014324?

Source: https://www.industrydocuments.ucsf.edu/docs/kmml0000

References:

1. E. Erkohen's monthly report of September 1980.
2. N. Moeller's memo to B. Krasna dated August 25th, 1980.
3. E. Erkohen's monthly report of August 1980.

October 30, 1980
ELE/noh

00014324B

Source: https://www.industrydocuments.ucsf.edu/docs/kmml0000

PROJECT TITLE : Material Testing

Period Covered : September 2 - November 4, 1980
Report Written by : P. Balliger
Report Approved by : F. Lopes

POROUS PLUG WRAP

Miquel y Costas

Further to a previous trial on diluted Marlboro, Miquel y Costas were requested during their last visit in Lausanne, to submit to QC PME three different qualities of porous plug wrap produced with the same components but with the following porosities:

20 K
40 K
60 K

This range of porosity will give us the opportunity to choose the right material suitable for diluted Marlboro according to the smoke delivery objective.

If in the near future for any reason whatsoever, the smoking figures of the Marlboro would not correspond any more to the data printed on the pack, it will be an advantage to have at our disposal an alternative porous plug wrap which can perform a corrective effect.

Consequently, cigarettes produced with the three above mentioned versions of porous plug wrap should be submitted to the smoking panel although two versions at least will not correspond to the present requirements.

CIGARETTE PAPER

Wattens E 10074

In order to find an alternative cigarette paper to the Schoeller & Hoesch Pela 54 M standard quality for the diluted version of MAA and MPH, Wattens proposed the above mentioned quality.

Depending on the outcome of the physical analysis presently running at FTR, the cigarettes MAA-CH will be manufactured with this cigarette paper for smoke yield determination and taste evaluation.

JOB 478 Velin -(ref. monthly report October 79)

This cigarette paper should compete with Braunstein 1615 Velin standard quality for BRD brand.
Due to the fact that the first version proposed by JOB was not in line regarding porosity requirements, the above mentioned cigarette paper represents the corrected version which will be tested on BRD for taste evaluation.

0001143249

Source: https://www.industrydocuments.ucsf.edu/docs/kmml0000

PROJECT TITLE : Material Testing

Miquel y Costas 824 T 53
Rossi S 855

(ref. monthly report April 1980)

In order to diversify supply sources for cigarette paper suitable for Marlboro Paneuropean , Miquel y Costas and Rossi were requested to produce samples which can be compared to one of our standard qualities (WP 60).

The cigarettes MLF-CH manufactured in FTR using these two qualities of paper give expected analytical results but were nevertheless rejected because they did not correspond to the Marlboro taste.

TECHNICAL SHEETS

Cigarette Paper

30 0043 E 10074 Wattens
30 0044 Velin 478 JOB
30 0045 Verge 537 JOB

QC PMR

P. Balliger

05.11.80 PBA/edk

0001143250

Source: https://www.industrydocuments.ucsf.edu/docs/kmml0000

PROJECT TITLE : SPECIFICATIONS/PROCESS ASSURANCE

Period Covered : 1. - 27.10.1980
Report Written By : T. Bel / C. Flury / A.-M. Kopp
Report Approved By: J.B. Boder

---

0. SPECIFICATIONS - OVERALL

0.1 PME Approved Suppliers

A discussion with collaborators of PME Leaf, Product Coordination, Operations, Purchasing, and Quality Assur. will take place in Lausanne beginning November, to inform on procedures installed in the different departments and the general policy regarding the approval of suppliers of ingredients and cigarette/filter supply materials, on PME level.

1. SPECIFICATIONS PER PRODUCTION CENTER

1.1 FTR Fabriques de Tabac Réunies SA Neuchâtel

- A new processing specification 21 ET-FC for expanded tobacco has been established.

- The special blend Checker Menthol has been cancelled and blend PM 008 PMK will be used for the cigarette Checker Menthol CRM 01 in the future.

- The RTD of the filter Merit 34.2900 has been increased from 410 to 420 mm WG, upon request of PME.

- For Checker Filter CRF 001 and Marlboro Menthol MFM 004, the blanks with the Swedish averages of 1980 are used.

- The following product versions have been abandoned:

Sweden:	MLB 037	HL 20s King Size
	MLF 037	HL 10s Long Size
	BSB 002	HL 20s Long Size
Norway:	MLF 036	HL 10s Long Size

- MLF 029 HL pack 20s, Long Size, continues to be manufactured for Sweden. MLA 036, HL 10s pack, King Size, as well as MET 036, HL 10s pack, are newly manufactured in FTR for the Norwegian market.

- The DPM value printed on the pack of BRD Brunette Double Filtre, has been decreased from 15 to 14 mg.

0001143251

Source: https://www.industrydocuments.ucsf.edu/docs/kmml0000

1.2 Intertaba S.p.A. Zola Predosa

- New filter making specs were prepared for a filter for project Queen, for filter "Gizeh 90" to be sold to Germany, as well as for felt pens.

- The RTD of the filter Merit 34.2900 has been increased from 410 to 420 mm WG, upon request of PME.

1.3 PMH Ph. Morris Holland, Eindhoven/Bergen op Zoom

- A new product version, MLK 068 Marlboro Kins Size in 20s soft pack, has been brought onto the market in Great Britain.

- Project specs have been established for "Los Angeles"

- A new product, MLG 090 Marlboro 100s red, soft pack, has been launched in Holland.

1.4 PMG Ph. Morris Germany, Munich/Berlin

- All filter making specs have been updated.

- The width of the tipping paper of 3 cigarettes with a 21 mm filter, BSL 01, MLK 30, and MLN 01, has been increased from 48 to 50 mm.

- The specified dilution for the Italian Marlboros, MLF 10 and MLK 30, has been increased to 12 resp. 14 %.

- The K-value of the German Marlboro, printed on the pack, has again been increased from 12 to 13 mg.

1.5 Weltab SA Bruxelles

- The filter diameters have been adapted to the new PME standard. - Several other specs have been updated.

- Two other brands, PMR Ph. Morris Regular Size soft pack and REC Record, have been transferred to Jubilé and the corresponding specs are available.

1.6 PM UK Ph. Morris London

0001432252

Source: https://www.industrydocuments.ucsf.edu/docs/kmml0000

1.7 PMN Ph. Morris Nigeria

- The complete specs file has been discussed with Mr D.G. Jemmet beginning October. Mr Jemmet will have the specs typed until beginning November.

1.8 Licensees

---

2. MATERIAL SPECIFICATIONS

2.1. Submissions to suppliers

PTP/076	Blancopor Z 4/120	Supplier : Benkert
PTP/080	Korkopor Z 3/ 60	" "

2.2. Approvals by suppliers

PCF/022	Cellulose film 330 MS 501	"	Rhone Poulenc
PCF/001	" " 335 MS 11	"	British Cellophane
PFM/023	Tow, white, 2,5/75'000 Y	"	Deutsche Rhodiaceta

2.3. "Usage of Materials" book

The first edition of section Glues (GS) has been established.

Section Pack (HL = Hinge Lid labels, LA = Labels soft, IF = Internal foil, CB = Cardboards/ Inner frame, etc. ST = Stickers, CF = Cellulose films, PT = Packet tear tape) has been updated.

3. PME STANDARD RECIPES

3.1 Recipe "Burley Casing E" is new.

3.2 Recipes CM-PC and MEN-AC have been withdrawn.

4. SPECIFICATIONS ON EDP

No progress.

0001143253

Source: https://www.industrydocuments.ucsf.edu/docs/kmml0000

5. PROCESS ASSURANCE

No report, due to absence of more than three weeks.

Thierry Bel

Catherine Flury

Anne-Marie Kopp

00014325

Source: https://www.industrydocuments.ucsf.edu/docs/kmml0000

PROJECT TITLE : Physical Testing Methods

Period Covered : October 1 - November 4, 1980
Report Written by : T. Piko
Report Approved by : F. Lopes

CIGARETTE COMPRESSIBILITY

While testing the cigarette compressibility instruments, a disturbance of the electronic control occurred which was due to interferences in the current supply. We are installing a powerline filter in order to eliminate this periodical disturbance which delays the foreseen delivery times by approximately 2 to 3 weeks.

PRESSURE DROP AND DILUTION INSTRUMENT EX RICHMOND

- The comparison measurements of the PDI/DDI instrument were carried out. The instrument will be installed in the Smoke Laboratory beginning of November.
- We ordered a third PDI/DDI instrument from Richmond.

AUTOMATIC SCALE FOR INDIVIDUAL CIGARETTE WEIGHT

- A new distributor of cigarettes for the automatic balance was sent to WELTAB.
- An electronic control device, allowing the selection of three different classes of cigarettes, was ordered from RCB-Electronic.

MISCELLANEOUS

We received an offer from Bruno Lüchinger AG for the aluminium tins which will be used for the o.v. determination of the ETNA tobacco. Price: SFr. 4500.-- per 1000 units of tins with covers. The persons being interested in this accessory will be contacted.

QC METHODS

T. Piko

06.11.80 THP / edk

Enclosure

0001432 55

Source: https://www.industrydocuments.ucsf.edu/docs/kmml0000

PROJECT TITLE : GERMAN LEGISLATION

PERIOD COVERED : SEPTEMBER / OCTOBER

WRITTEN BY : W. FINK

CHEMIKALIENGESETZ

The "Chemikaliengesetz" regulation concerning the application of hazardous chemicals in Germany was published on September 16, 1980. According to Art. 2 - Para. 1, tobacco products are not touched by this law (1).

COUMARIN

On September 4, 1980, BAT was granted a special permit to use Coumarin on tobacco in West Germany (2). The use of Coumarin is limited to 100 ppm/cig. for a total of 10 billion cigarettes p.a.

W. Fink

REFERENCES

(1) Bundesgesetzblatt, Teil 1, 58 (1980) p. 1718.

(2) GMBI 1980, 28, Vol. 31, p. 475.

000143256

Source: https://www.industrydocuments.ucsf.edu/docs/kmml0000

PROJECT TITLE : PATENTS

PERIOD COVERED : October 1980

WRITTEN BY : J.C. Mandiratta

PROCESS OF NITRATES AND NITRITES REDUCTION IN TOBACCO. NINO AEROBIC AND ANAEROBIC FERMENTATION PROCESS PATENT APPLICATIONS IN GREAT BRITAIN AND WEST GERMANY.

The examination of the above mentioned applications has been successfully completed by the Great Britain Patent Office and the patent applications will be published in due course.

The West German application (P 28 16 427), claiming aerobic and anaerobic fermentation processes, has been rejected by the West German Patent Office. A new application claiming only aerobic fermentation process has been submitted. A second application claiming anaerobic process will be submitted, without losing the priority rights, as soon as the examination procedure of the first application is completed.

TOBACCO WITH REDUCED PROTEIN CONTENTS

Details of this new invention are given to Dr Hach who is preparing an application for the inventor's approval. As soon as details of this application are finished a priority application will be filed in West Germany.

DEUTSCHE BENKERT GMBH - WEST GERMAN PATENT APPLICATION P 25 31 285 - TIPPING PAPER PERFORATION

After consulting and agreeing with PM New York it has been decided to delegate Dr Hach to oppose this application in the West German Patent Office.

PATENT DOCUMENTATION

Todate, 4500 patents are on the STAIRS system for patent documentation.

J.C. Mandiratta

0001432257

Source: https://www.industrydocuments.ucsf.edu/docs/kmml0000

PROJECT TITLE : Instrumentation and process automation

Written by : M. Thévoz

Period : August - October 1980

Data processing of finished products QC

The following specifications were presented to four different computer product companies (Hewlett-Packard, Digital Equipment, IBM, Data General) in order to evaluate the best configuration for data acquisition and processing in the smoking laboratory.

- Acquisition of data directly from instruments under computer control (on-line mode).
- Automatic print out of reports and results listing.
- Flexibility for extension to other instruments in the future.
- High reliability in data transfer and storage.
- Off-ranges analytical values detection.
- Computer control extendable in a radius of 500 m around instrumentation.
- Simple handshaking between computer and technicians.
- System exploitation under non-specialist personnel.
- Wide ranges of interfaces available to allow powerful communications with different kind of instruments.
- Local data storage capacity for one month.
- Software flexibility for acquisition task control.
- Communication with host computer for periodical transfer of analytical results.
- Sample encoding.
- Acknowledge of recorded data on each workplace.

The most attractive and complete system was proposed by Hewlett-Packard and is briefly described below.

Hewlett-Packard proposal

The proposed configuration is built around the HP 1000 F computer with 20 M bytes disk storage capacity.
A single cable named "data link" connects the different instruments to the computer. On the link, and on each workplace, a simple terminal with build-in interfaces controls all transactions between computer and the instruments.

00014325B

Source: https://www.industrydocuments.ucsf.edu/docs/kmml0000

The sequential commands and instructions are given in an interactive mode by a restricted set of predefined function keys.
Each terminal recognizes the sample to be processed after reading a bar code written label, generated by a printer, under computer control. An alphanumeric code of up to 20 characters could be used as sample identifier.
The code is the specific access key for future interrogation of results data bank.

Hewlett-Packard proposed also a powerful software named DATACAP and IMAGE 1000 for the management of all transactions between the instruments and the computer.

Through an interactive interrogation mode, each workplace terminal could be configured, defining only a set of parameters which are introduced under DATACAP control. For special purposes, subroutines written in FORTRAN allow a better control of the complicated instruments.

In the future, new products announced within the next 8 months and kindly described by the HP engeeners of Grenoble, will provide us a great flexibility for interfacing the smoking machines and instruments with BCD (Binary Coded Decimal) outputs such as weighing machines.
Another interesting feature of this proposal is the compatibility with all instruments from the HP family (GC, HPLC) through the universal communication bus, named "HP-IB" (Hewlett-Packard Instrumentation Bus) which is fully supported in that application. This bus is normalized since 1975 under the code IEE 488 and several another instrument manufacturers are now producing HP-IB compatible machines for analytical chemistry.

In the context of a smoking laboratory, the HP configuration will provide us the following system benefits:

- Reduce error risk in data transfer.
- Increase operator disponibility.
- Speed up access to analytical results.
- Save time and operators.
- Prepare the laboratory for a more complete automatization.
- Follow up of the samples in the laboratory (analysis in progress).
- Collect temporary QC data for different users.
- Give immediate information on off-range analytical results.

M. Thévoz

0001143259

Source: https://www.industrydocuments.ucsf.edu/docs/kmml0000

T S OSDENE

DEC 4 1980

T S OSDENE

NOV 24 1980

00143260

Source: https://www.industrydocuments.ucsf.edu/docs/kmml0000